DESIGN AND IMPLEMENTATION OF A PROTOTYPE PERSONAL STATIC VAR COMPENSATOR

by

V. Ram kumar
Reg. No 71203415011

of

KUMARAGURU COLLEGE OF TECHNOLOGY
COIMBATORE

A PROJECT REPORT
Submitted to the

FACULTY OF ELECTRICAL & ELECTRONICS
ENGINEERING

In partial fulfillment of the requirements
for the award of the degree

of

MASTER OF ENGINEERING

IN

POWER ELECTRONICS & DRIVES

JUNE 2005

BONAFIDE CERTIFICATE

Certified that this project report titled **DESGN AND IMPLEMENTATION OF A PROTOTYPE PERSONAL STATIC VAR COMPENSATOR** is the bonafide work of **Mr. V.RAMKUMAR** who carried out the research under my supervision. Certified further, that to the best of my knowledge the work reported herein does not form part of any other project report or dissertation on the basis of which a degree or award was conferred on an earlier occasion on this or any other candidate.

D. Somasund 6/6/05

PROJECT GUIDE

HEAD OF THE DEPARTMENT

The Candidate with University Register No: 71203415011 was examined by us in the project Viva-Voce examination held on 23.06.05

INTERNAL EXAMINER

23/06/05

EXTERNAL EXAMINER

(DR S.Subha Rani)

TAMILNADU ELECTRICITY BOARD

Engr. N.S. Namasivayam, BE, MIE.,
Assistant Executive Engineer/P&C,
O/o the Superintending Engineer,
Protection & Communication Circle,
Coimbatore.

TO WHOMSOEVER IT MAY CONCERN

This is to certify that **Mr. V.Ram Kumar** of final Year M.E (Power Electronics & drives), Department of Electrical & Electronics Engineering of **Kumaraguru College of Technology**, has completed his project titled **"DESIGN AND IMPLEMENTATION OF PROTOTYPE PERSONAL STATIC VAR COMPENSATOR"**, successfully at our guidance during May 2005 and June 2005.

His character and conduct were found to be good during his stay with us. We wish him successful in all his future endeavors.

6/6/2005

Er. N.S. NAMASIVAYAM

Er. N. S. NAMASIVAYAM B.E.
EXECUTIVE ASSISTANT / P & C
TNEB, COIMBATORE-12.

ABSTRACT

The focus of this thesis is the design and implementation of a personal static var compensator (PSVC) for distributed var control through load power factor correction. The PSVC demonstrates the two key benefits of power factor correction, which include decreased power costs and increased system capacity.

This project is titled as PSVC since it is implemented adjacent and personally to the load centers which consumes the reactive power. The PSVC prototype consists of two types of branches – a TSC branch and a TCR branch. The power factor goes below the certain required value and the TSC is responsible for supplying the reactive power and while supplying the power factor goes to a leading value and the TCR is responsible for absorbing some reactive power in order to maintain the required power factor.

A microcontroller is responsible for calculating the load displacement power factor (PF_D) and for executing the fuzzy logic control scheme for the two branches. The PSVC was found to reduce the RMS current drawn by a 0.75HP AC motor. The expected quick rate of return of installation costs is attributed to the PSVC's low initial cost and its ability to reduce tariffs for reactive power consumption.

ACKNOWLEDGEMENT

First and foremost, I would like to extend my heart-felt gratitude and thanks to our beloved Principal of Kumaraguru College of Technology, **Dr.K.K.PADMANABHAN** without whom I would not have been studying in this institution.

I extend my deference to our H.O.D **Prof. REGUPATHY SUBRAMANIAM** for offering his expert counseling and providing us with all the necessary infrastructure and facilities over these project periods.

A deep sense of gratitude and immeasurable credit goes to my internal guide **Mrs. D. SOMASUNDARESWARI M.E.,** for her valuable guidance, support and her active interest towards the successful implementation of the project.

I am also indebted to **Dr. T.M.KAMESWARAN** for the helping hand he extended during trying periods while doing the project. I am very much grateful to all other staff members of Electrical & Electronics Engineering Department for their kind support during the course of my project.

I am bound to convey my deep sense of gratitude to my external guide **Engr. N.S.NAMASIVAYAM B.E, MIE., Assistant Executive Engineer/P&C,O/o the Superintending Engineer, TAMILNADU ELECTRICITY BOARD,** a benevolent and technically proficient personality for his guidance to progress this work successfully, without whom I am doubtful whether I would have completed the project. The constant guide and care showered upon me by my **PARENTS** is untold and immeasurable. Finally, it gives me a great pleasure to express my sincere thanks to all my **FRIENDS** who have helped me during the course of this work.

TABLE OF CONTENTS

LIST OF FIGURES

CHAPTER 1

INTRODUCTION

1.1 THE STATIC VAR COMPENSATOR (SVC)

The focus of this research has been on a particular FACTS (Flexible AC Transmission System) device – the Static Var Compensator (SVC). The SVC is a proven technology for power factor correction and reactive power compensation. Traditionally the SVC has been used as a shunt-connected device that offers voltage stability and load compensation to the power system at particular points such as transmission line midpoints or near varying loads. Since EPRI's (Electric Power Research Institute) release of the FACTs strategies in 1987, SVC's have grown in popularity and are well regarded in the power industry.

1.2 EFFECTS ASSOCIATED WITH POOR POWER FACTOR

Power utilities and their customers often concern themselves with three poor power factor effects that include increased power costs, reduced system capacity, and diminished power quality. Each effect is summarized below.

- **Increased Power Costs**
    - Higher kVA demand – The reactive power that is needed by inductive loads must be generated by the power utility. This increase in overall power will result in a higher power bill for the end consumer.

  - Low PF penalty – For reasons discussed below, it is in the power utility's best interest to offer power factor correction incentives to consumers when their power factor becomes low. These incentives take the form of tariffs.

- **Reduced System Capacity**
  - Less kW per kVA – Total power generated (kVA) is composed of two components:
    1. Kilowatts (kW): The useable power
    2. Kilovars (kVar): The unusable power

    The desired power factor of 1.0 (unity) is obtained by reducing the costly generation of kVars, thus maximizing the kW. Maximizing kW results in more efficient power generation and delivery.
  - Higher Current Draw – Power factor and load current have an inverse relationship. If the power factor is low, then the current drawn will be high. Minimizing consumer load current will lessen the demand on the distribution feeder.
  - Less Room for Expansion – If the generation of kVars is significant then the pathway for real power transfer will become smaller making power delivery more difficult.

- **Diminished Power Quality**
  - Increased Voltage Drop – A poor power factor will yield an increased voltage drop because lagging current in inductive loads causes load voltages to fall.
  - Higher Distribution System Losses – Increasing the power factor to near unity can reduce distribution system losses.

1.3 PERSONAL SVC (PSVC) PROTOTYPE AND ITS APPLICATIONS

The topic of this thesis describes a “personal” static var compensator (PSVC) prototype that can be installed adjacent to a reactive load so that its displacement power factor can be optimized in real time. The displacement power factor (PF_D) is the ratio of real power to apparent power, only considering the fundamental frequency. Raising the PF_D will allow for a lower RMS current draw, decreased power costs, and increased system capacity.

The PSVC can be installed on a wide-variety of reactive loads including air conditioning units, refrigerators, escalators, elevators, or any application that relies on AC induction motors. For example, “efficient” induction motors that are found in residential refrigerators and air conditioning units have a typical power factor of 0.8 to 0.82. On any given day a billion induction motors are operating in elevators, escalators, machine tools, intake and exhaust fans, conveyors, pumps, and compressors. Increasing the displacement power factor, thus the efficiency, will result in significant power savings of 15% - 20% when using these motors. The PSVC is targeted for three audiences: The power utility company, the light-industrial or residential consumer, and the manufacturers of applications that rely on induction motors. Each targeted audience is described in more detail.

- **The Power Utility Company:**

As previously discussed, the power utility company has an incentive to encourage consumers to maintain a near unity power factor. The power company could purchase PSVC’s and install them at particular distribution locations – very near the customers’ reactive loads. As a result, a lower reactive power demand will allow real power to be delivered more efficiently.

- **The Light-Industrial (Commercial) or Residential Consumer:**

The light-industrial or commercial consumer is concerned with minimizing costs due to tariffs imposed by the power utility. A customer who operates several AC induction motors (such as those in escalators and elevators) would be able to increase their efficiency by 15% - 20% by installing low-cost PSVC's. Air conditioning units and refrigerators, which are abundant in residential homes, would also be ideal PSVC applications. Nearly 25% of residential energy consumption is a result of refrigerators and air conditioners with 99.9% of Indian residences having at least one refrigerator and 72% of residences having an air conditioner [2]. Increasing the energy efficiency of residential and commercial air conditioners and refrigerators would offer significant energy savings to the consumer. Since standard air conditioners and refrigerators typically maintain power factors from 0.5 – 0.7, an approximate 30-50% increase in efficiency is possible [3]. Currently, residential customers are not charged based on their reactive power usage, but current technology does exist to implement this type of billing.

- **Manufacturers of Applications that Rely on Induction Motors:**

Manufacturers are constantly developing new techniques to increase the efficiency and lower the power consumption of their applications. Lower power consumption and more efficient operation are needed to attract consumers as well as meet government regulations.

One such government guideline is the Energy Star rating for applications that meet strict energy usage criteria. Due to its small size, the PSVC could easily be included into an existing energy-inefficient application design. Traditionally, fixed capacitors have been utilized in motor applications to provide a fixed power factor correction. The PSVC overcomes this lack of power factor correction flexibility by providing dynamic correction -and a power factor closer to unity.

1.4 RESEARCH GOALS

The goal of this research is to design a low cost distributed var controller that is capable of power factor displacement (PF_D) correction. The var controller design will be based on the static var compensator (SVC), which is a proven FACT's device for power factor correction and voltage stability. Verification simulations will be performed to help validate hardware control methods. The microcontroller – controlled prototype PSVC will be economical, robust, and "personal". The PSVC will contain two branches – a TSC and a TCR branch that are controlled by a fuzzy controller. It will be a completely self-contained device capable of being installed on a variety of reactive loads.

1.5 THESIS ORGANIZATION

Chapter 2 of this thesis is a literature survey describing FACTS, and specifically, SVC operation. Some reviewed papers also describe microcontroller – controlled SVC prototype designs and implementations. Chapter 3 describes PSVC design description and MATLAB/SIMULINK simulations and chapter 4 describes PSVC hardware design and application of the PSVC and presents experimental results. In Chapter 5, conclusions, future work, and lessons learned are provided.

CHAPTER 2

LITERATURE SURVEY

In this chapter a literature survey of topics related to the SVC operation and microcontroller based control will be given. Improvements over existing work are presented at the conclusion of the chapter.

2.1 FUNDAMENTALS OF SVC'S

The static var compensator (SVC) is regarded as the first FACTS (Flexible AC Transmission System) devices. Basin Electric Power Cooperative installed the first SVC in Nebraska in 1977. Since then, the SVC has become known for its ability to offer voltage stability to the power system and to compensate reactive loads. The SVC, however, does not provide a means for controlling real power flow directly.

In 1978, Gyugyi, Otto, and Putman presented the fundamentals of static load compensation in [4]. This early work described the theoretical background for thyristor – switched inductors (reactors) and capacitors. The paper describes the two appropriate circumstances when reactive load compensation should be considered: 1) the AC system cannot maintain the desired voltage and 2) it is too costly to have the AC system provide for the reactive power demand of the load.

The static compensator switching and control fundamentals are also described in [4]. It is important to ensure that the static compensators are switched at the appropriate times so that transients do not occur. For both capacitors and inductors, the appropriate switching times occur at the zero crossing of the current. Capacitors have a maximum theoretical switching-in delay of 1 cycle, assuming that the capacitor is precharged to the "incorrect" polarity. The capacitor can be switched out in a half-cycle. Inductors, however, are able to be both switched in and out within a maximum delay of a half-cycle. Capacitors are switched completely in or out of the system as needed; however, the current through the inductor can be controlled continuously providing a variable susceptance. Susceptance is defined as the ease with which AC current will pass through capacitors or inductors. Delaying the closure of the inductor thyristor switch every half cycle can control this susceptance. This delay is commonly referred to as the firing angle, α.

Although the inductor's thyristors can be fired at anytime after the zero crossing of the current, they can only be turned off through natural commutation, when the current reaches zero. Equation 2.1 from [4] illustrates the relationship between the firing angle α and the current through the inductor I_L.$\alpha = 0$ is defined as the zero crossing of the current.

$$I_L = (V/\omega L)\,(1 - (2/\pi)\,\alpha - (1/\pi)\sin 2\alpha) \tag{2.1}$$

Two control strategies for SVC's are discussed in [4]. The first strategy is feed forward control, which repeatedly solves modeled equations to determine the optimum inductor firing angle and the number of capacitor banks needed.

Feed forward control is a good choice when performing load compensation because at any time the load characteristics can be measured and the optimum compensating susceptance can then be calculated. The second strategy, feedback control, is useful for closed-loop control when minimization of error signals is the primary goal.

Feedback control is useful when terminal voltages are being maintained because the error signal can represent the difference between a desired voltage and an actual voltage. Any change in the error signal will result in a change in the susceptance of the compensator. The controllable susceptance of the inductor (B_L) can be defined as a function of the conduction angle and the reactance of the inductor (X_L). The conduction angle σ, opposite from the firing angle α, is defined as the time that the thyristors are turned on. Equation 2.2 shows this relationship.

$$B_L(\sigma) = (\sigma - \sin\sigma) / \pi X_L \tag{2.2}$$

Using the relationship $\sigma = 2(\pi - \alpha)$ the controllable susceptance of the inductor in terms of α is shown in Equation 2.3.

$$B_L(\alpha) = [2(\pi - \alpha) - \sin 2(\pi - \alpha)] / \pi X_L \tag{2.3}$$

Furthermore, it is often useful to express the controllable inductor susceptance in terms of its counterpart, reactance. Reactance is defined as the opposition of AC current flow in capacitors and inductors

$$X_L(\alpha) = [[2(\pi - \alpha) - \sin 2(\pi - \alpha)] / \pi X_L]^{-1} \tag{2.4}$$

As shown in Equation 2.4, the inductor reactance can be found by inverting Equation 2.3. The reactance equation is related to Equation 2.1 in that the chosen firing angle will determine how much current is allowed to flow through the inductor.

2.2 THE ADAPTIVE POWER FACTOR CONTROLLER (APFC)

An adaptive power factor controller (APFC) utilizing fixed and switched capacitor is described in [5] and [6]. Even though the described APFC does not make use of an inductor branch as in SVC's, the contributions to effective capacitor switching techniques are notable. The described APFC was first built and tested in the late 1980's. It was targeted for applications that consist of a dynamic reactive power demand such as industrial induction motors, transmission lines, and distribution feeders. In [6], the application of APFC's to wind farms is justified by the large amount of reactive power demanded by the wind turbine from the utility.

The APFC consisted of a certain amount of fixed capacitance along with a determined amount of switched capacitance that would be controlled dynamically as needed. As outlined in [5], capacitors should be installed in binary ratios so that the maximum amount of VARS can be supplied with the least number of capacitors. "For example, three switchable capacitors per phase lead to seven distinct steps of reactive power compensation (in addition to zero) [5]." The APFC utilized SCR's (silicon controlled rectifiers) with a back-to-back connected diode as the capacitor switching devices. The diode was used to insure that the SCR would never become reversed biased. The APFC control circuitry consisted of a current sensor circuit, decision logic circuit, timing circuit, and a switching circuit. The circuits acting together were responsible for intelligently controlling the capacitor switching.

2.3 MICROCONTROLLER – BASED SVC'S

Two papers, which were both published in 1992, describe a microcontroller-based SVC: [7] discusses an SVC for power systems laboratory experiments, while [8] addresses the open-loop control strategy of SVC's. The contributions of each paper are presented.

In [7], a hardware SVC model was developed for laboratory experiments. The model consisted of a fixed capacitor branch and a controlled inductor branch. The inductor branch consisted of thyristors that received a gating signal from an 8253 programmable interval timer.

Two software control strategies were developed to control the inductor's firing angle: proportional plus derivative (PD) control and proportional plus integral plus derivative (PID) control. These control strategies were used to maintain the load voltage at a desired value. Opto-couplers were used to electrically separate the lower voltage of the integrated circuits from the higher voltage of the thyristors. The thyristor gating signals would be supplied to the opto-couplers, which in turn would activate the thyristors.

A second microcontroller-based SVC was developed in [8]. Unlike [7] which focused primarily on hardware design, [8] focused on a specific inductor control strategy that was verified through a developed prototype. An open-loop inductor control strategy was described that could accommodate load changes within the next cycle.

The open-loop control is based upon the simple idea that “improving the power factor, no matter its definition, is equivalent to reducing the current drawn from the feeder [7].” The total current is measured and an inductor firing angle α is computed that would minimize the RMS current drawn. Fixed capacitors were chosen to provide the leading VARS to the load. The prototype developed utilized an 8088 10MHZ personal computer with traditional plug in cards such as an ADC (analog to digital conversion) card and a digital I/O card. Current measurements were sampled 128 times each cycle and because integer arithmetic was used, the optimum α could be calculated in 1ms.

2.4 A FUZZY LOGIC CONTROL STRATEGY

In [9] a fuzzy logic control scheme was designed and simulated for a power system SVC. This particular fuzzy logic control strategy was simulated on a fixed capacitor – controlled inductor type SVC, however, the fuzzy control strategy is completely independent of the SVC type used. The goal of this fuzzy controller was to provide maximum damping and stability to the power system. This particular fuzzy controller only used the real power flow as a raw input, and the output is the firing angle α. The power flow signal is conditioned and filtered so that the measures of acceleration, speed deviation, and phase deviation can be extracted. These measurements combine to determine the current “state” of the system. This system state is then used, as a fuzzy input, to a rule set whose defuzzified output will determine whether the inductor susceptance should be capacitive (to increase real power flow at the SVC) or inductive (to decrease real power flow at the SVC).

2.5 THESIS OBJECTIVE

The objective of this thesis is to develop a prototype personal static var compensator (PSVC) that incorporates both the switched capacitor banks as well as a controlled inductor. MATLAB/SIMULINK simulations will be performed to verify prototype hardware and embedded software measurement techniques.

The SIMULINK model is developed using the MATLAB blocks and using these blocks initially the power factor displacement is calculated. Then the calculated power factor displacement is converted into its equivalent phase angle difference and it is fed as input to the fuzzy controller block. Fuzzy is responsible for calculating the TSC and TCR firing.

But in case of hardware implementation the fuzzy is replaced by a low-cost standalone PIC microcontroller will be utilized to control both the capacitor banks and the inductor for load displacement power factor correction, which will ultimately reduce the RMS current drawn. The PSVC will be a completely self-contained, robust device capable of being installed on a variety of reactive loads. The PSVC will be evaluated in terms of applicability, efficiency, and cost. The PSVC is designed to target distributive reactive loads, which demand costly reactive power from the AC system. A printed circuit board will be created for the PSVC.

CHAPTER 3

PSVC PROTOTYPE DESIGN

3.1 PSVC DESIGN DESCRIPTION

Typical types of SVC's include the TCR-FC (Thyristor Controlled Reactor – Fixed Capacitor) and the TCR-TSC (Thyristor Controlled Reactor – Thyristor Switched Capacitor). The TCR-FC type utilizes a thyristor-controlled reactor (inductor) to absorb reactive power while the fixed capacitors generate reactive power. The more flexible TCR-TSC type utilizes capacitor banks that can be switched in and out as needed. Fig. 3.1.1 illustrates a typical SVC that includes a TSC branch as well as a TCR branch that can be controlled continuously to absorb reactive power. Although only one capacitor is shown for the TSC branch, often banks of capacitors are utilized to provide discrete steps of reactive power.

The proposed PSVC prototype will consist of two branches – one TCR branch and one TSC branch. The TSC branch is composed of a bank of thyristor - switched capacitors that provide a dynamic range of leading vars. A firing angle is supplied to the TCR branch so that the susceptance of the reactor can be controlled continuously, thus a finely tuned power factor is achieved. Figure 3.1.2 shows the PSVC prototype configuration. An open-loop fuzzy logic control scheme was chosen for the TCR firing angle calculation, and a PICmicro 16F877 8-bit microcontroller, manufactured by Microchip, was chosen to implement this control strategy.

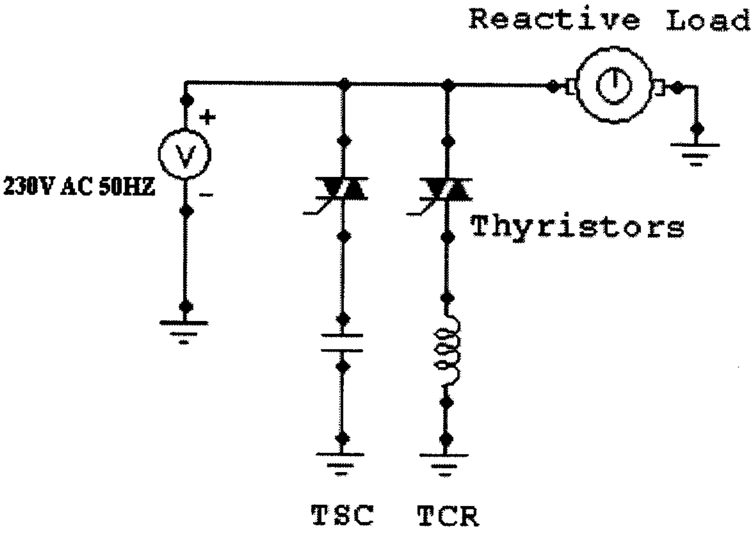

Fig. 3.1.1. Basic SVC Configuration

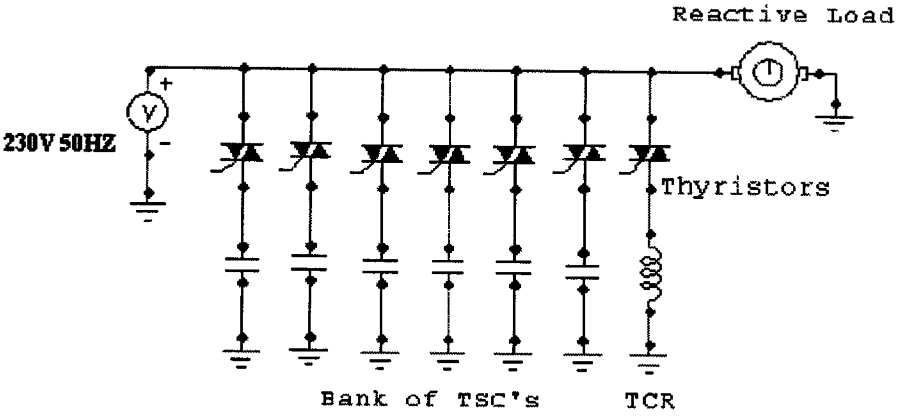

Fig. 3.1.2. Prototype PSVC configuration

3.2 PSVC MATLAB/SIMULINK SIMULATIONS

SIMULINK is a simulation environment based upon the scientific computing platform, MATLAB. Both MATLAB and SIMULINK are products and registered trademarks of the Mathworks Company.

3.2.1 PSVC Control Verification through Simulation

The goal of the simulations was to verify the applicability of the control strategies for the two branches, especially the fuzzy logic control for the TCR. These simulations served as an excellent method for verifying measurement techniques that would later be applied when programming the microcontroller.

Several SIMULINK blocks were created to encapsulate particular functionality needed for the PSVC model. These blocks include: Capacitor Switching Controller, Power Factor Displacement Calculator (PF_D), Load Phase Angle Calculator, and TCR Firing Angle Controller. Each block developed consisted of several hidden sub levels, each with their own defined functionality. These blocks will be described individually, and then a PSVC model will be presented along with its simulation results.

3.2.2 Capacitor Switching Controller

As shown in Fig. 3.2.1, the Capacitor Switching Controller block accepts one input: The total power (VA). The total power is further broken down into its two components – real power (watts) and reactive power (vars). Once the reactive power falls below a certain preset value, the Capacitor Switching Controller will activate the TSC capacitors with a gating signal outputted from the block's D latch. The "C" block represents a constant preset VARS value that is used to determine when the capacitors should be activated.

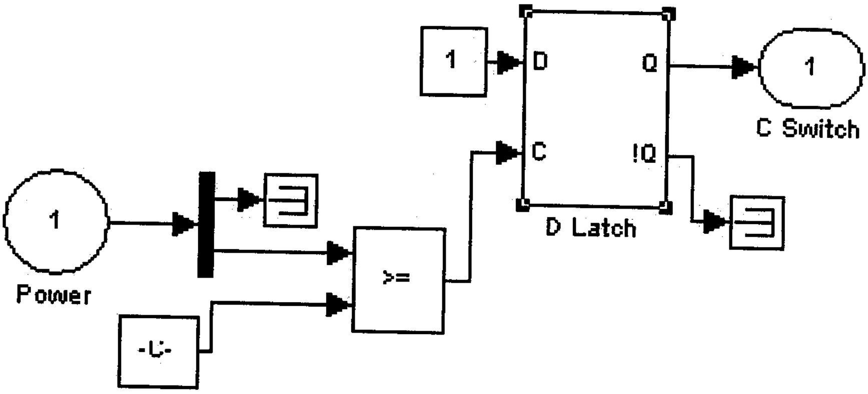

Fig. 3.2.1. Capacitor Switching Controller

3.2.3. Power Factor Displacement (PF_D) Calculator

Fig. 3.2.2 shows the Power Factor Displacement (PF_D) Calculator block, which accepts the total power (VA) and outputs the displacement power factor for the particular load. As described previously, the displacement power factor (PF_D) is the ratio of real power to total power, when only considering the 50HZ fundamental frequency. PF_D is defined by Equation 3.1. This block is used to verify the output from the Load Phase Angle Calculator block, which is described next.

$$PF_D = (kW / kVA) = \cos\theta \tag{3.1}$$

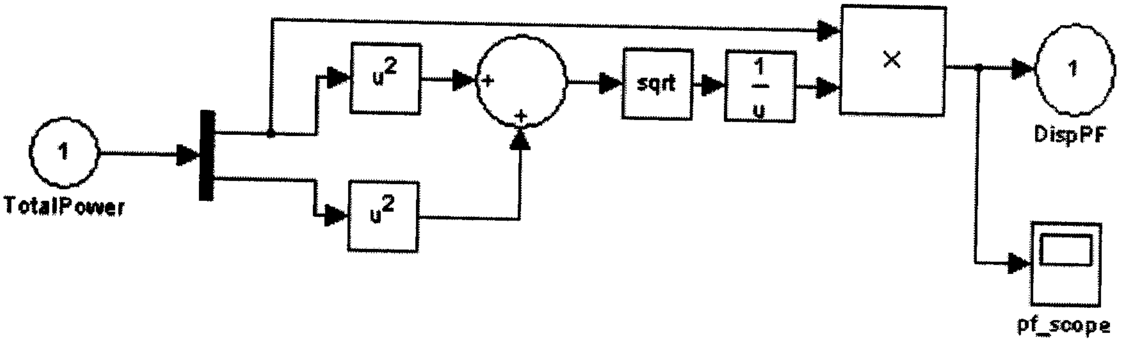

Fig. 3.2.2. Power Factor Displacement Calculator

3.2.4 Load Phase Angle Calculator

The Load Phase Angle Calculator block, Fig. 3.2.3, was designed to calculate the load phase angle. These simulations served as good indicators for measurement techniques that would later be used when programming the microcontroller.

This block accepts the voltage and current waveforms as inputs and calculates the phase angle (difference) of the two waveforms. The voltage and current waveforms are polled for their zero crossings independently, and their status is saved as control flags. Once the zero crossings occur, their individual times are stored. To determine whether the current is leading or lagging, the control flag variable is set depending on which zero crossing is first detected. After both zero crossings are detected, the times are subtracted from one another and converted into a phase angle θ. The time difference (ΔT) can be converted into the phase angle θ by using Equation 3.2. The PF_D can be found by taking the cosine of θ. The PF_D Calculator block was used to verify the calculated θ.

$$\Theta = 360[\Delta T / (1 / 60)] \qquad (3.2)$$

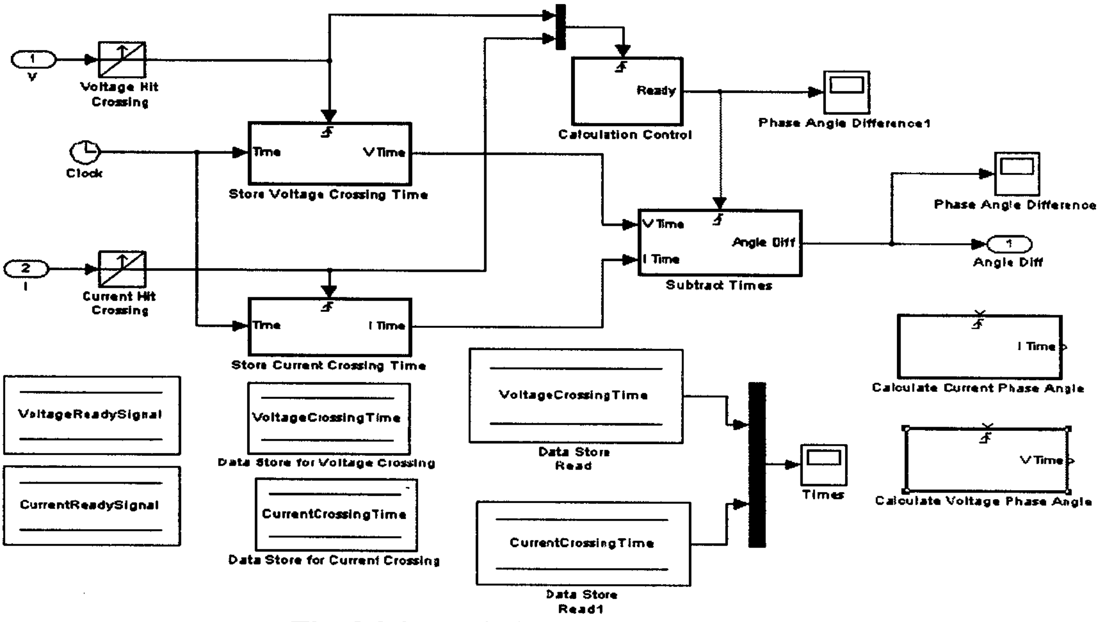

Fig. 3.2.3. Load Phase Angle Calculator

3.2.5 TCR Firing Angle Controller

The TCR firing angle controller, shown in Fig. 3.2.4, accepts the current waveform (I), total power (VA), and the phase angle difference (θ) as inputs. Note that the current waveform and power inputs are used only internally for inspection, and is not actively needed by the controller. The fuzzification in which the phase angle difference input is needed as the primary input to the fuzzy logic controller and the output from the fuzzy logic controller is the TCR firing angle in degrees, which is translated into timed firing pulses and sent to the TCR thyristors. The fuzzy logic control scheme was developed using the MATLAB Fuzzy Logic Toolbox and the membership functions are shown in Fig. 3.2.5 and 3.2.6.

Here the fuzzy Inference System used is mamdani, because it can be applied to both the linear and non-linear systems. And the Defuzzification method used is centroid since it has got advantages over the other Defuzzification methods. And triangle membership function is used.

The input membership functions from left to right are: LargestNeg, LargeNeg, MediumNeg, SmallNeg, SmallPos, MediumPos, LargePos, and LargestPos. The output membership functions from left to right are: Smallest, Small, Medium, Large, Largest, Huge, and Off.

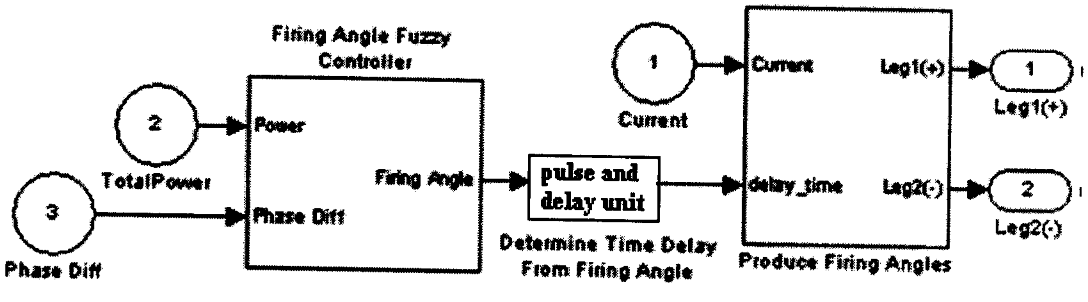

Fig. 3.2.4. TCR Firing Angle Controller

The Fuzzy Membership Functions and rules will need to be configured to yield the desired center-firing angle α that is appropriate for the reactive load. The following presents the membership functions and rules that were used for the AC motor and a center firing angle α of 115°.

Nine membership functions were used for the phase angle difference θ. The valid range of θ is from -20° (leading) to 25° (lagging). As shown in Fig. 3.2.5. triangle membership functions were used and named from left to right as: LargeLeading, MediumLeading, SmallLeading, Neutral, SmallLagging, MediumSmallLagging, MediumLagging, LargeLagging, and LargestLagging.

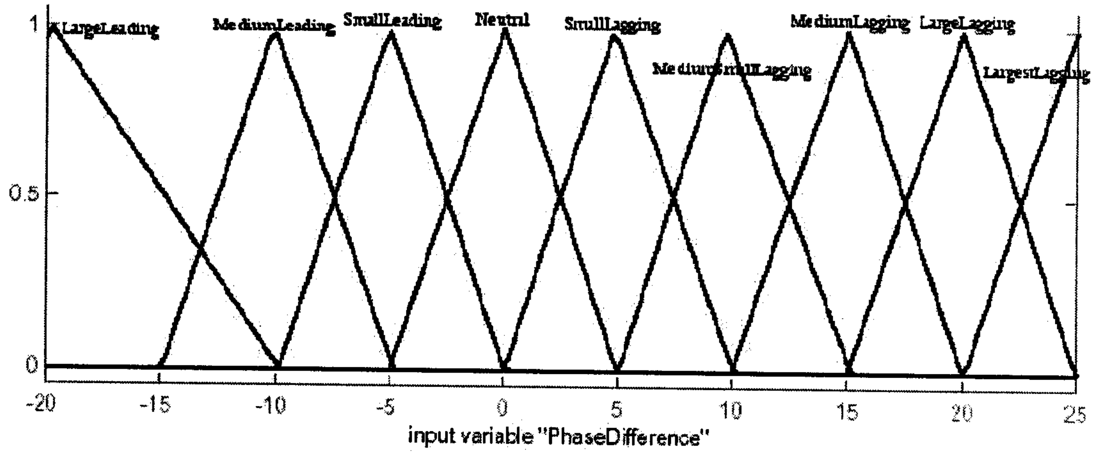

Fig. 3.2.5. Fuzzy Input: Phase Angle Difference θ

Ten membership functions were used for the fuzzy output, Firing Angle α. These membership functions are shown in Fig. 3.2.6. From left to right, the membership functions were named: ON, Mostly_ON1, Mostly_ON2, Medium_ON1, Medium_ON2, Medium_ON3, Slightly_OFF1, Slightly_OFF2, Mostly_OFF, and OFF. The OFF membership function encompasses firing angles from 128° to 180° because these values are not particularly effective in controlling the TCR.

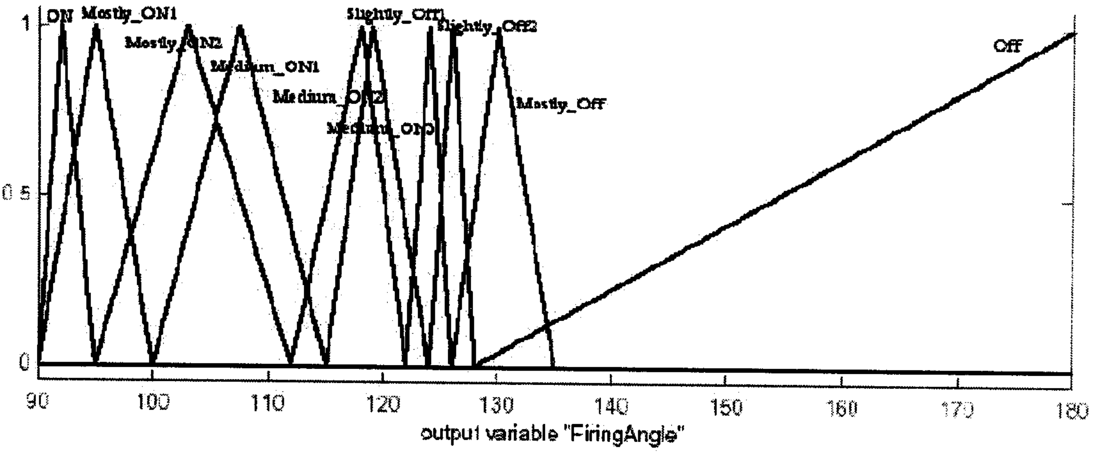

Fig. 3.2.6. Fuzzy Firing Angle Output α

As Figures 3.2.5 and 3.2.6 illustrate, the controller consists of a one input – one output fuzzy logic controller. The Phase Angle Difference (θ) input spans from –20° to +25°. No membership functions are defined around zero because this area is defined as a "no-action" area. The Firing Angle output membership functions span from 90° (TCR on) to 150° (TCR effectively off). The fuzzy rules map one-to-one between the input and the output, and for the simulations, a centroid defuzzification was performed. Fig. 3.2.7 shows the "surface" covered by the fuzzy logic controller. The membership functions must be tuned so that the optimum firing angle for the particular load is centered in the output membership functions.

Note that near a 0° phase angle difference the firing angle is between 110° and 115° degrees. This fuzzy controller is most effective between the firing angles of 95° to 120° because these firing angles have the most effect upon the reactance of the TCR.

The fuzzy rules used are listed below:

IF PhaseDifference is LargeLeading, THEN FiringAngle ON

IF PhaseDifference is MediumLeading, THEN FiringAngle is Mostly_ON1

IF PhaseDifference is SmallLeading, THEN FiringAngle is Mostly_ON2

IF PhaseDifference is Neutral, THEN FiringAngle is Medium_ON1

IF PhaseDifference is SmallLagging, THEN FiringAngle is Medium_ON2

IF PhaseDifference is MediumSmallLagging, THEN FiringAngle is Medium_ON3

IF PhaseDifference is MediumLagging, THEN FiringAngle is Slightly_OFF1

IF PhaseDifference is LargeLagging, THEN FiringAngle is Slightly_OFF2

IF PhaseDifference is LargestLagging, THEN FiringAngle is Mostly_OFF

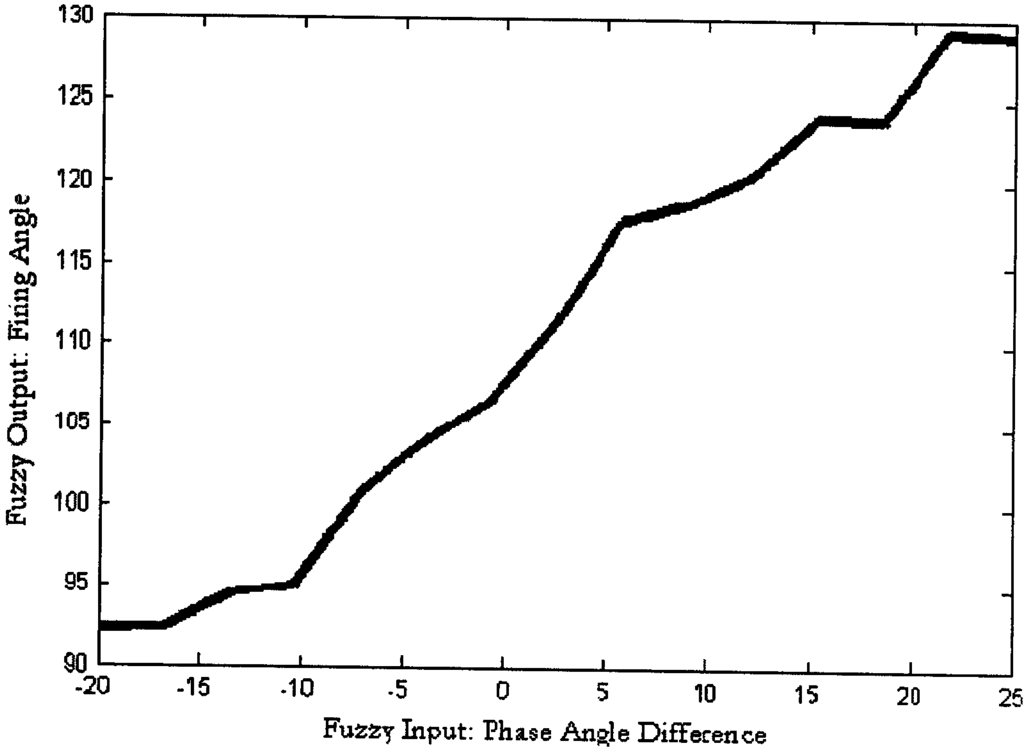

Fig. 3.2.7. Fuzzy Surface Area: Firing Angle vs. Phase Angle Difference

3.2.6 PSVC Simulation of TSC and TCR Branches

Several SIMULINK simulations were created to verify the feasibility of the PSVC design and the TCR fuzzy controller. For example, a 0.75HP reactive single-phase load was modeled with a slight load change (switch closing) occurring at time t = 1s. The reactive load is fed by a 1kV/50 HZ source. The TSC branch and a TCR branch were modeled with their respective controllers. The TSC branch consists of a single switched capacitor while the TCR branch consists of a reactor that is fed a firing angle determined by the fuzzy controller. The fuzzy controller accepts the phase angle difference of the load as an input and outputs the optimum firing angle. Back-to-back SCR's with snubber circuits were chosen to closely match the actual thyristors used in the prototype. This particular SIMULINK model is shown in Fig. 3.2.8. For readability purposes, several smaller SIMULINK blocks have been removed from the figure.

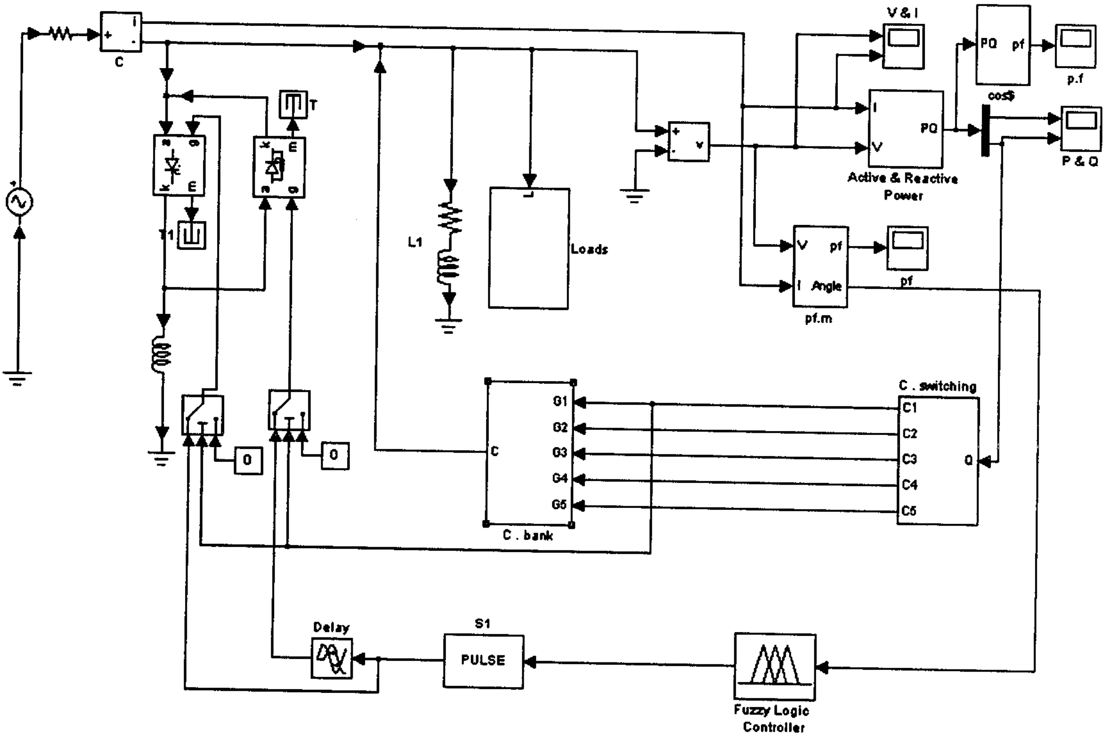

Fig. 3.2.8. Simulink Model of PSVC

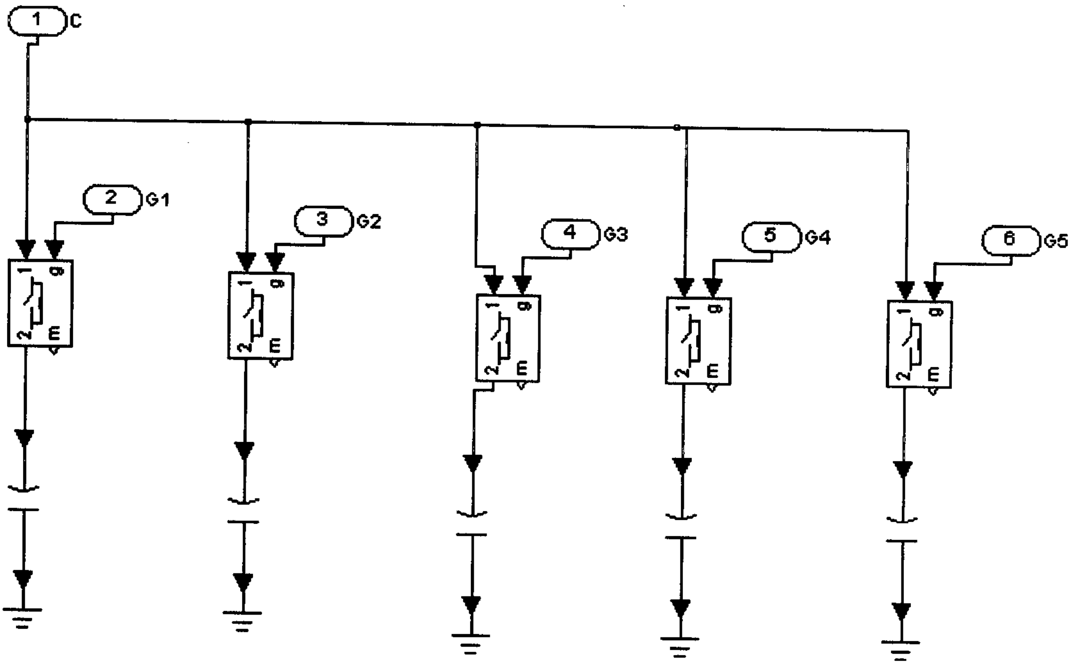

Fig. 3.2.9. Simulink Model masked under C - Bank

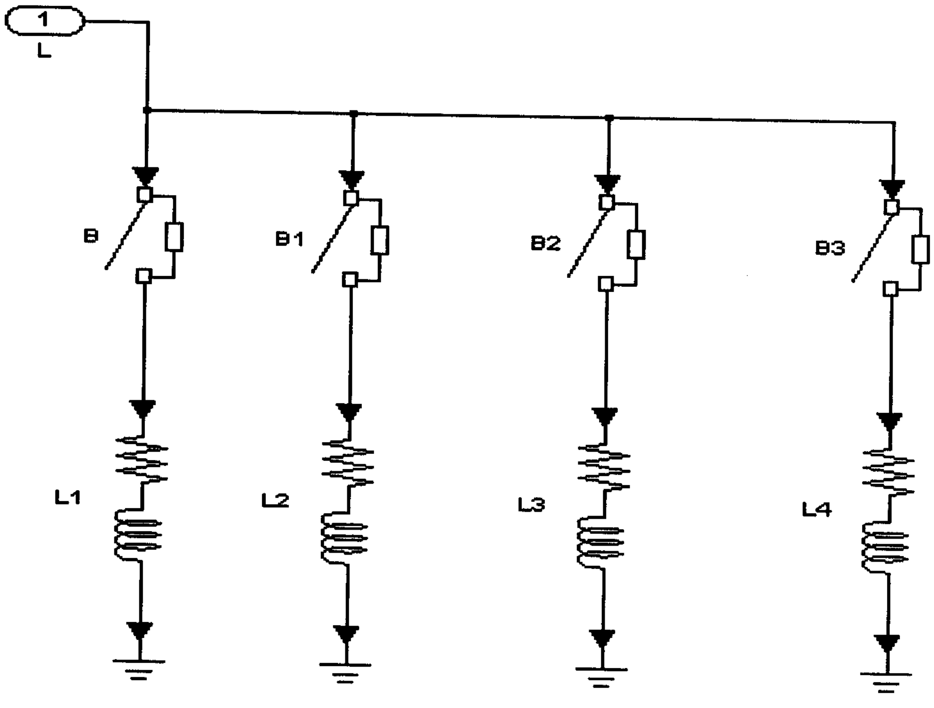

Fig. 3.2.10. Simulink Model masked under Loads

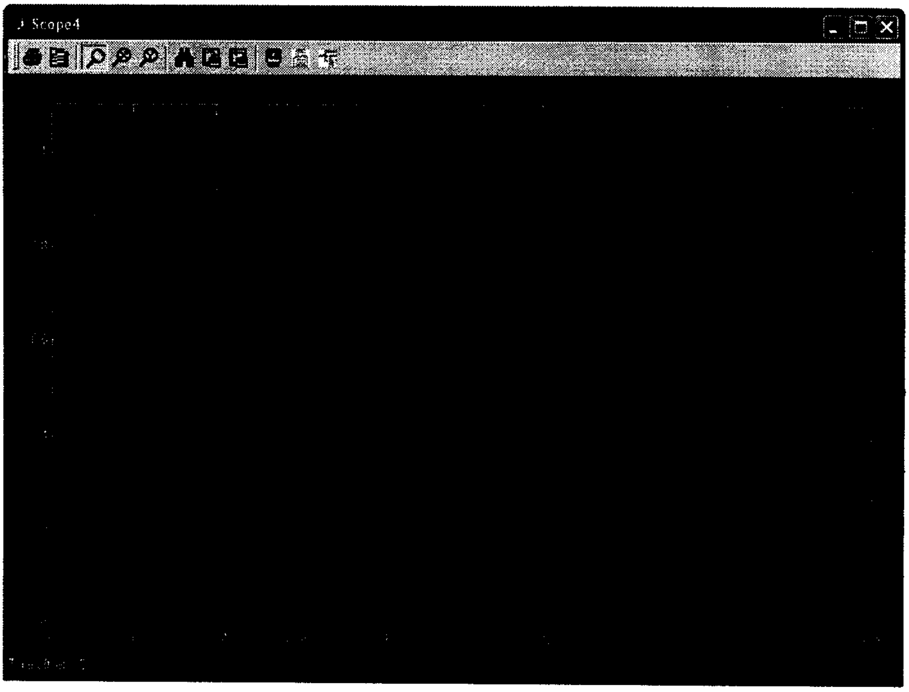

Fig. 3.2.11. Simulated reactive load without PSVC compensation

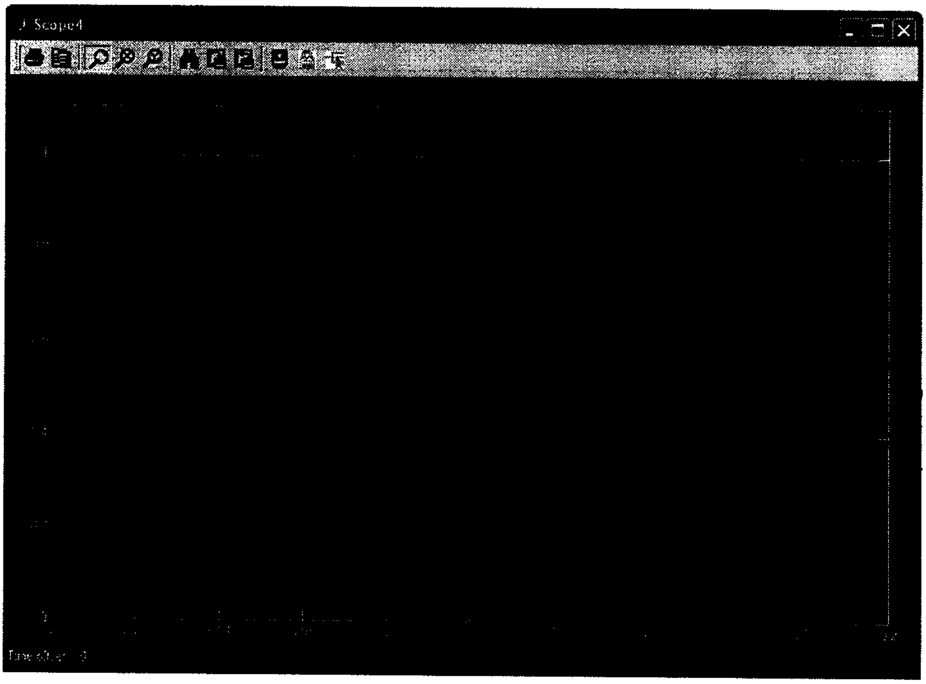

Fig. 3.2.12. Simulated reactive load with PSVC compensation

Fig. 3.2.11 shows the displacement power factor (PF_D) of the load without the branches compensating. At t = 1s the switch closes and the PF_D drops slightly. Fig. 3.2.12 illustrates the improved PF_D because of the compensating branches. Fig. 3.2.13 illustrates the changing current through the TCR branch at t = 1s, which is a result of the updated firing angle.

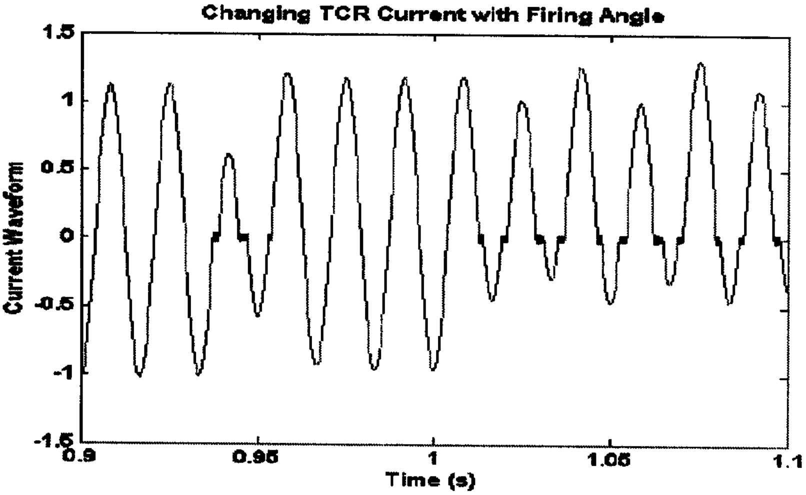

Fig. 3.2.13. Changing TCR Current at Load Change

The values for the capacitor and inductor were selected by considering the reactive power demanded by the load. The TSC branch is calculated to provide a slight overcompensation (approximately 10% - 20%) of reactive power, and the TCR size is chosen to offset that overcompensation. The coordination of the two branches provide for a finely tuned displacement power factor. Equation 3.3 shows how the capacitor value can be found. Equation 3.4 illustrates how the inductor size can be found. For the equations, a 20% TSC overcompensation is used. Designers will vary this value considerably depending on load characteristics and available capacitor bank sizes.

$$Q_{LOAD} + (20\% * Q_{LOAD}) = V^2_{RMS} / X_C$$

$$X_C = (2\pi fC)^{-1} \qquad (3.3)$$

$$(20\% * Q_{LOAD}) = V^2_{RMS} / X_C$$

$$X_L = (2\pi fL) \qquad (3.4)$$

CHAPTER 4

PSVC TARGETED APPLICATION – AC MOTOR

4.1 PSVC CIRCUIT AND HARDWARE DESIGN

The PSVC circuitry consists of the following hardware components and divisions. Design steps, circuit descriptions, and circuit drawings will be presented for each of the divisions.

The hardware design includes the following components viz...

1. Power Supply Unit
2. Zero Crossing Detectors and Transistors
3. Input Ex-OR gate
4. PIC Micro Controller
5. Driver-Relay and Capacitor Banks
6. LCD Display
7. Reset Inverter

The detailed descriptions about the above each component is presented well as below.

THE MAIN FUNCTIONAL CIRCUIT DIAGRAM OF PSVC

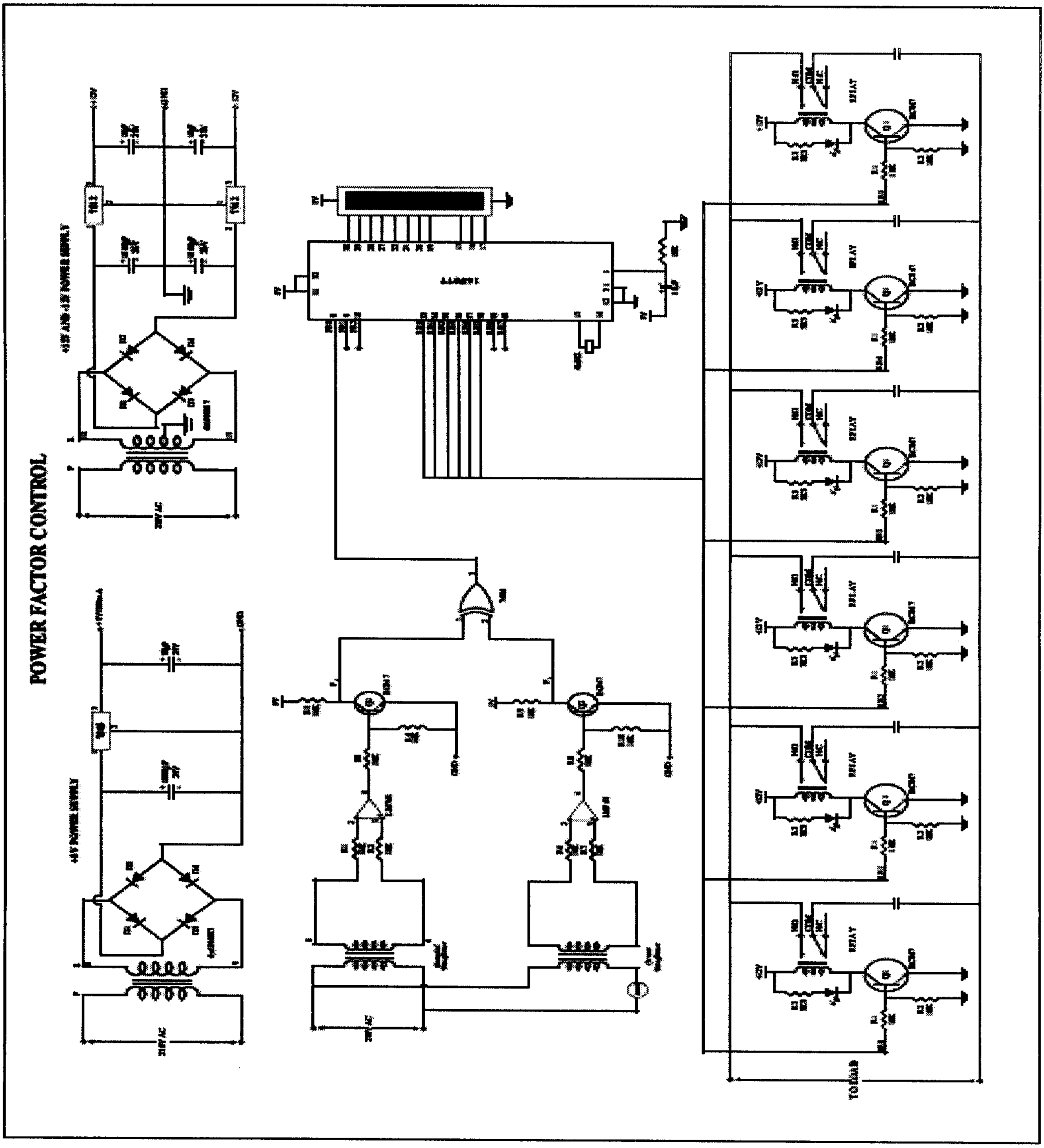

Fig. 4.1.1. PSVC Functional Block Diagram

4.1.1 Power Supply Unit

The power supply unit provides the necessary power supply for the whole circuit. It gives a regulated power supply of +5V and ±12V for running the processor and driving the relay.

There is a step down transformer which is a two tapped one of which one provides 230/9 – 0 V and the other tapping provides 230/ 15 – 0 – 15 V. The 9 -0 V provides the power supply for the micro controller and the other 15 – 0 -15 V provides power supply for the zero crossing detector i.e. for the 7th and 4th Pin of the OP-AMP LM741. The power supply unit consists of the following IC's viz... 7805, 7812 and 7912 for voltage regulation.

The LM78XX series of three terminal regulators is available with several fixed output voltages making them useful in a wide range of applications. One of these is local on card regulation, eliminating the distribution problems associated with single point regulation. The voltages available allow these regulators to be used in logic systems, instrumentation, HiFi, and other solid state electronic equipment. Although designed primarily as fixed voltage regulators these devices can be used with external components to obtain adjustable voltages and currents.

Then there is Current Transformer and a Potential Transformer. The output from each of these Transformers will be fed to the Zero Crossing Detectors for finding the Zero Crossing of the Current and the Voltage. The Current Transformer is of ratio 100:1 and the output of the Voltage Transformer is 5V. The following fig.4.1.2 shows the complete Power Supply Unit.

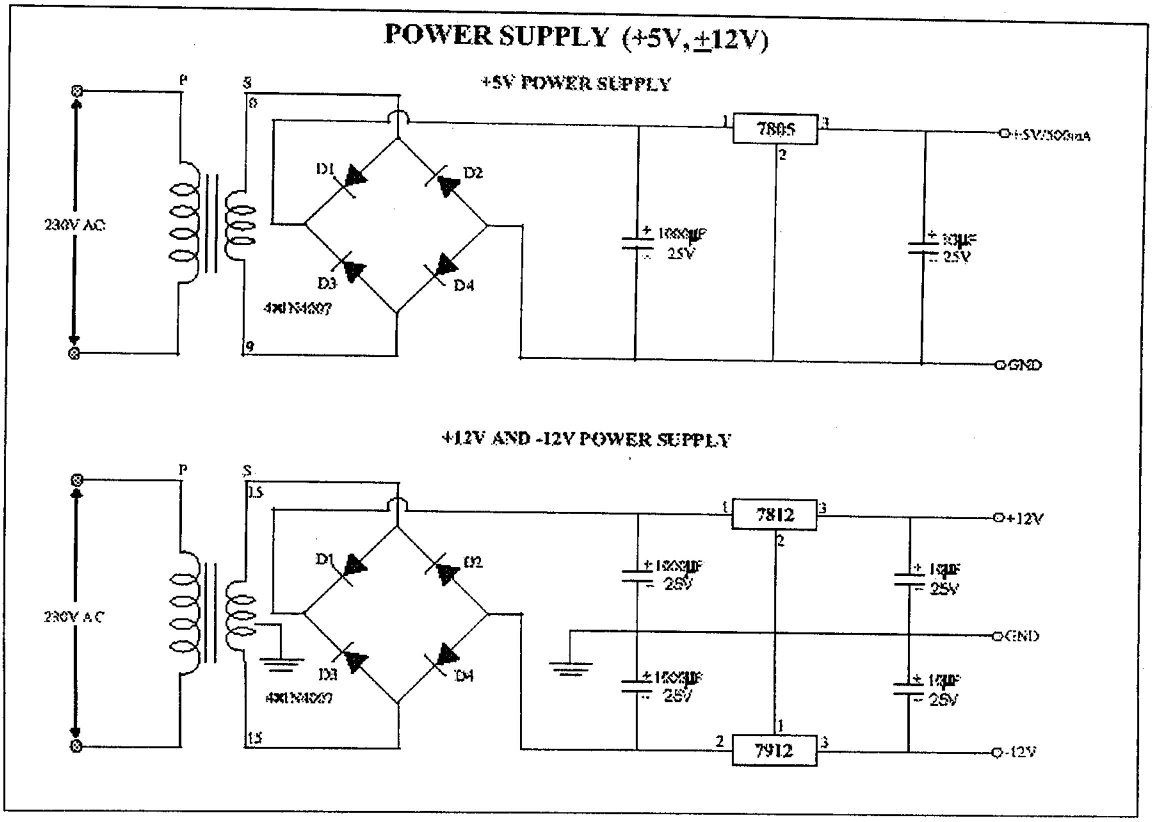

Fig. 4.1.2. Power Supply Unit

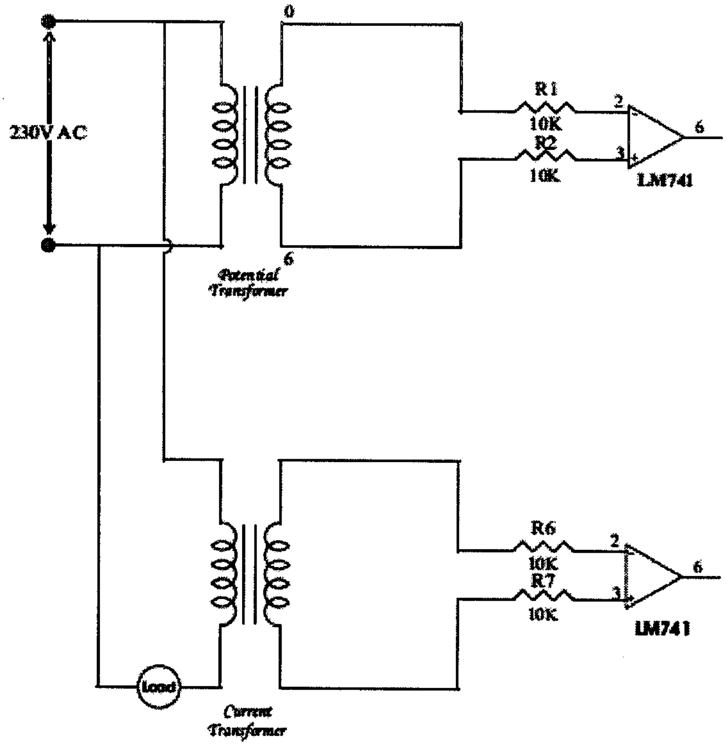

Fig. 4.1.3. Current transformer and Potential transformer

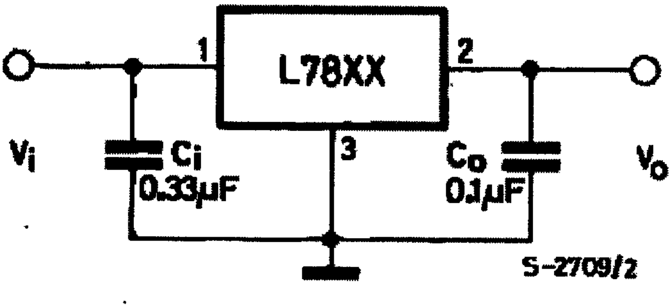

Fig.4.1.4. Application Circuit of the IC's 7805, 7812, 7912

4.1.2. Zero Crossing Detectors and Transistors

The two ZCD's of which one takes the input from the Current Transformer and the other takes the input from the Voltage Transformer. The input is of sinusoidal waveform and the output will be a regulated square one. The output is fed to the transistor BC547 for the voltage regulation of 5V.

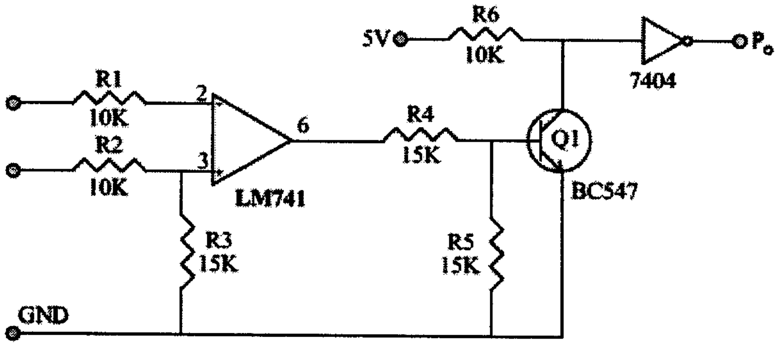

Fig.4.1.5. Zero Crossing Detector

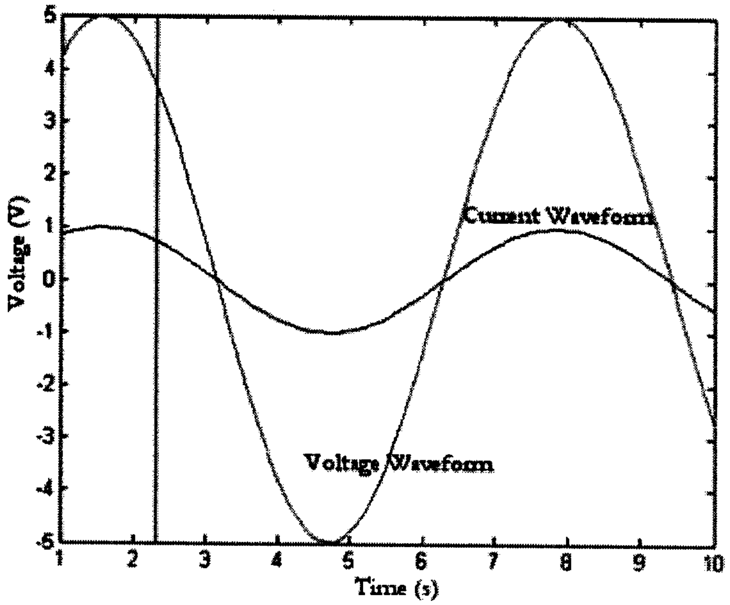

Fig.4.1.6. Example Waveform Before Voltage Comparators

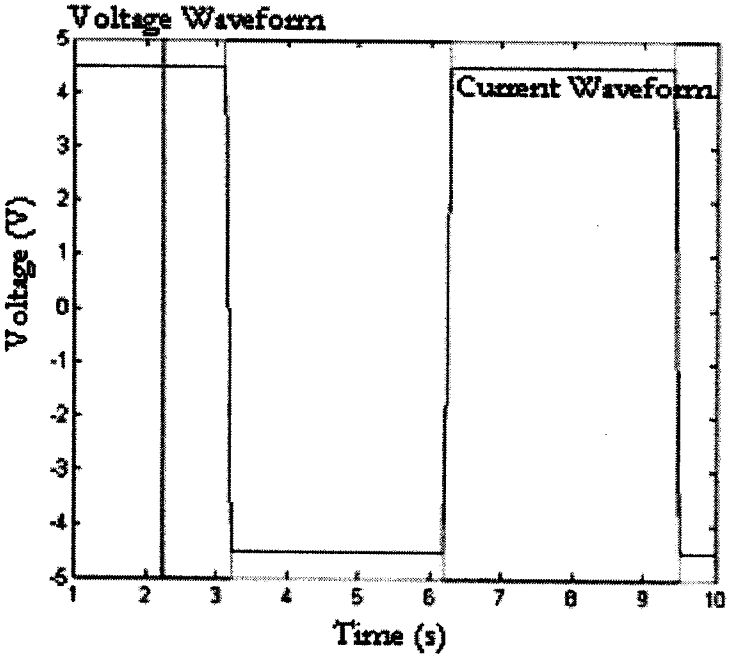

Fig. 4.1.7. Example Waveform After Voltage Comparators

The Zero Crossing Detector is nothing but a OP-AMP based comparator used to convert the incoming sinusoidal waveform into pulse waveform. It has an inbuilt transistor used for wave shaping purpose also. The two ZCD's output is then fed to the Ex-OR gate for finding the time difference between the current and the voltage crossing time. Then the difference in the voltage and current crossing time will be considered for finding the power factor.

4.1.3. Input Ex-or gate

The Ex-OR gate takes the input from the ZCD's and finds the time difference for calculating the power factor. The following diagram shows the connection diagram of Ex-OR gate and also shows the function table.

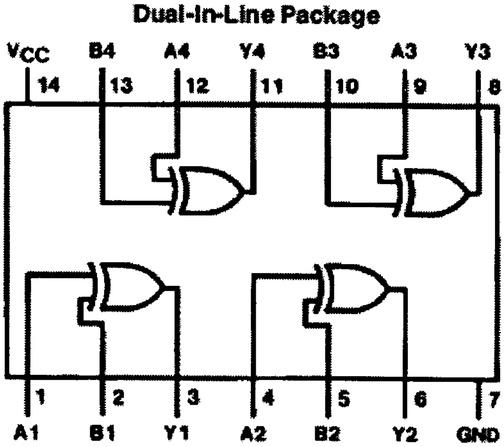

$$Y = A \oplus B = \overline{A}B + A\overline{B}$$

Inputs		Output
A	B	Y
L	L	L
L	H	H
H	L	H
H	H	L

H = High Logic Level
L = Low Logic Level

Fig.4.1.8. Connection diagram and function table of Ex-OR gate

4.1.4. PIC Microcontroller (16F877)

The microcontroller chosen to control the PSVC is the 8-bit PICMicro® ("PIC") 16F877 manufactured by Microchip. Also note that the PIC16F874 can also be chosen. This microcontroller was chosen for its low cost, small size, and versatility. The PIC is a RISC processor having only 35 single word instructions. 20MHZ, the maximum clock speed available for the PIC, was chosen to ensure ample time for mathematical calculations. The PIC contains 368 bytes of RAM, interrupt capability, three timers, and digital input and output. Note that the smaller 24 -pin PIC16F874 can be substituted for the PIC16F877. This section will present the microcontroller hardware and any supporting circuitry needed to perform the important function of load displacement power factor (PF_D) calculation. The PF_D is the control variable used for both the TSC and TCR branches.

To measure the PF_D, the PIC must be provided with the waveforms of both the voltage and the current. Because of the higher voltage used, both the voltage and current waveforms must be conditioned so that they are acceptable as digital inputs to the PIC.

A clock is set to find out the difference between the voltage and current crossing time. Based on the time difference between these two, the power factor is calculated. If the voltage crossing time leads the current then the corresponding power factor is lagging one and if current leads the voltage then the corresponding power factor is leading.

$$\Theta = 360[\Delta T / (1 / 60)] \qquad (4.1)$$

The above equation is used for calculating the power factor. i.e. by taking $\cos\theta$ of the above equation the power factor is calculated. The microcontroller is responsible for calculating the power factor. Basically the codings are written in 'C' and using the compiler MPLAB the equivalent Hex Codes are generated and the kit is simulated using the simulator.

The ± 5 volt square wave is now applied to two individual digital input ports on the PIC. These CMOS ports consist of two protection diodes and a pair of MOSFETS. The protection diodes are similar to those used externally to the PIC, however these clip the input to either 0 volts or $V_{DD}+V_{DIODE}$ volts. The MOSFETs, serving as a zero-crossing detector, will cause the PIC to read either a HIGH or LOW on the port depending on the polarity of the clipped input. Fig. 4.1.9 shows a typical PIC input port. Strategic polling of the input pins is how the PIC detects zero-crossings as well as whether the current is leading or lagging.

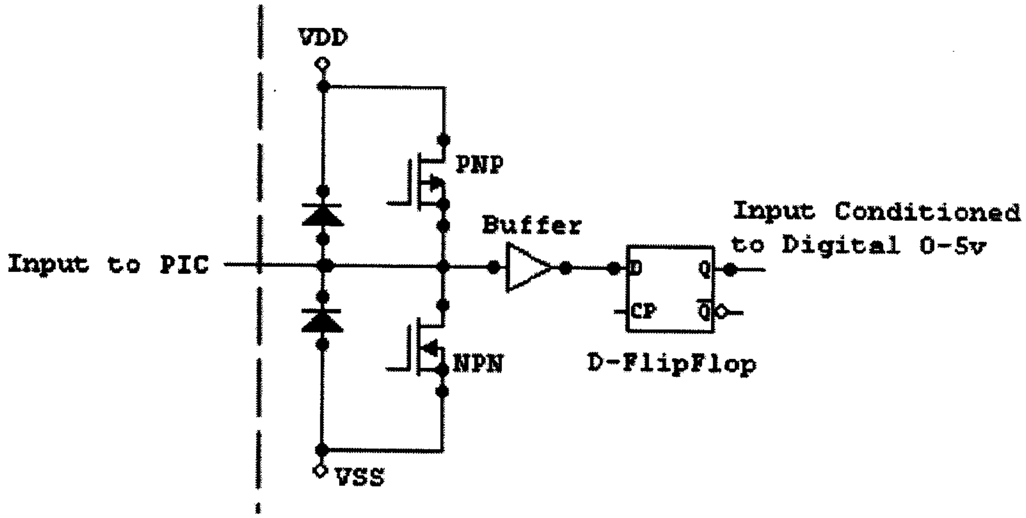

Fig 4.1.9. Internal Components of the PIC Input Port

Once the power factor is calculated then in case of simulation the fuzzy logic is used for calculating the firing angle i.e. by taking the phase angle difference as input and the output will be the firing angle. We all very well know that the phase angle difference may vary between the ranges of -25 to +25 and if it goes below the said values the system is unexcited one. And keeping this in mind the phase angle difference axis in fuzzy is taken in the range between -20 to +20.

But in case of hardware it is pretty complicated in designing the fuzzy controllers and hence we are going for the microcontroller programming for implementing the above said conditions. i.e. the microcontroller is programmed based on some trial and error method. It can be explained as below. If the power factor goes below a certain value and in order to meet the required power factor demand, then the particular number of capacitor banks will start supplying the reactive power compensation. And this is done by the help of the relays connected between the driver and the capacitor banks. The Drivers will get the command from the microcontroller and it activates the relays for connecting the capacitors with the load line. The used here is explained in the next paragraph.

4.1.5. Driver-Relay and Capacitor Banks

The ULN2803 is ideally suited for interfacing between low logic level digital circuitry (such as TTL, CMOS or PMOS/NMOS) and the higher current/voltage requirements of lamps, relays, printer hammers or other similar loads for a broad range of computer, industrial, and consumer applications. All devices feature open–collector outputs and free wheeling clamp diodes for transient suppression. The ULN2803 is designed to be compatible with standard TTL families.

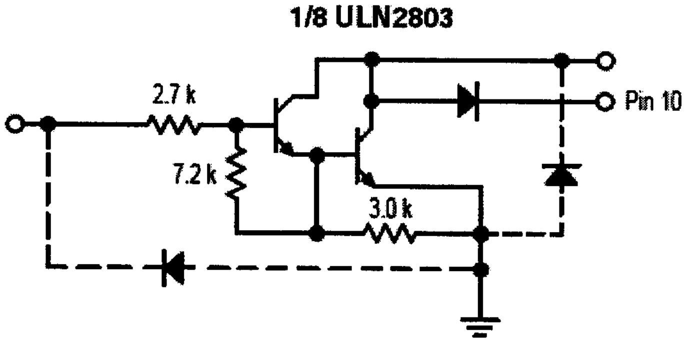

Fig.4.1.10. Schematic diagram of the Driver ULN2803

The Driver IC ULN2803 will receive the command from the microcontroller and the corresponding relay will be activated. The driver basically works as an interfacing unit between the microcontroller and the relay. The above diagram shows the schematic diagram of the driver.

A relay is a switch worked by an electromagnet. It is useful if we want a small current in one circuit to control another circuit containing a device such as a lamp or electric motor which requires a large current, or if we wish several different switch contacts to be operated simultaneously.

When the controlling current flows through the coil, the soft iron core is magnetized and attracts the L-shaped soft iron armature. This rocks on its pivot and opens, closes or changes over, the electrical contacts in the circuit being controlled it closes the contacts. The Capacitor banks are connected with the line and this will supplies the required reactive power to the line in order improve the power factor. And each relay is connected with 4μF capacitor banks.

4.1.6. LCD Display

The LCD is updated every five seconds using an interrupt on the PIC. This is accomplished by programming the PIC's timer 2 to interrupt every 30ms. A variable counter is used to count the interrupts and after 100 have occurred, the LCD display is updated with the current power factor.

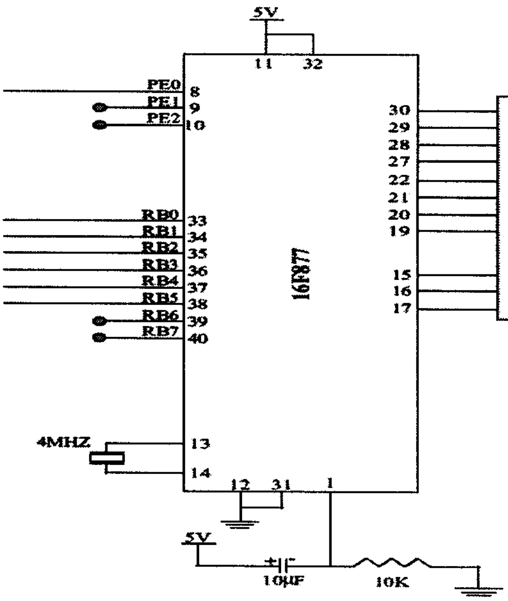

Fig.4.1.11. LCD connection with the microcontroller

The interrupt is synchronized so as to not interrupt during the 50HZ cycle, but instead, will wait until the end of a cycle. Since writing to the LCD can take a considerable amount of time, it is recommended that the LCD not be updated too often and that the amount of text printed should be kept at a minimum. The LCD is wired to the PIC output port B.

4.1.7. Reset Inverter

The reset inverter used here is 74LS14. Whenever the microcontroller is switched on it should be reset with the above said inverter and this is done only when the pulse comes from high to low. And this reset operation is done in order to avoid some unwanted operation and for proper functioning of the microcontroller. And thus the hardware description about the functional circuit of the PSVC and its each individual devices and components is described well as above.

4.2 SOFTWARE IMPLEMENTATION

The software for the PIC was developed using the C programming language and a specific PIC C compiler, known as "PICC", which is distributed by CCSInfo. This compiler compiles the C source code and generates the equivalent assembly instructions. A software PIC programmer known as MPLAB, distributed by Microchip, was chosen as the tool that would program the PIC microcontroller once the assembly code had been generated. MPLAB transfers the microcontroller instructions from the PC to the PIC via a serial cable. Once the PIC has been programmed, the PC, serial cable, and developer software is no longer needed. The PIC is capable of executing completely autonomously. The entire PSVC source code listing can be found in the appendix 1.

4.3 DESIGN OF A PRINTED CIRCUIT BOARD

A printed circuit board was designed and created using the etcher/plotter and drilling machine. The first step in creating a printed circuit board is to draw the layout of the copper traces using a software tool. In this case, the software tool Traxmaker by MicroCode Engineering was utilized to layout the copper traces.

If possible, it is recommended that a single (bottom) layer printed circuit board be designed. A single layered board is less complex and allows for easy soldering underneath the board. The Traxmaker design is given in appendix 2. The blue copper traces indicate the bottom layers, while components such as chip sockets, resistors, etc., were placed on the topside of the board.

CHAPTER 5

CONCLUSION

5.1 SUMMARY

This thesis describes a "personal" static var compensator (PSVC) that has the ability to compensate the displacement power factor (PF_D) to near unity of reactive loads. The PSVC is responsible for distributive var control and is modeled after the well-known static var compensator (SVC), an early FACTS device. The PSVC compensates the PF_D of the reactive load by intelligently switching TSC (thyristor switched capacitor) and TCR (thyristor controlled reactor) shunt branches. The TSC branches consist of capacitors sized in minimum ratios to provide discrete steps of leading vars. The TCR branch consists of a fine-tuning inductor that is controlled continuously using a firing angle and an open-loop fuzzy logic control scheme.

The proposed PSVC incorporates the concepts of the adaptive power factor controller and merges them with the SVC. The result is a robust device capable of providing PF_D compensation to reactive loads in an economical fashion. The displacement power factor is extremely important to industrial customers and utilities, as well as becoming increasingly important to small commercial and residential consumers. Poor PF_D's are associated with increased power costs, reduced system capacity, and diminished power quality. A 0.75hP AC motor was chosen as the test reactive load for evaluation of the PSVC. The PSVC was able to reduce load RMS current draw while increasing the load's PF_D to 0.99 lagging

5.2 FUTURE WORK

Although within acceptable limits, the motor's current total harmonic distortion (I_{THD}) slightly increases with PSVC. Since harmonics are often the cause of overheating and motor wear-and-tear, the generation of harmonics needs to be addressed. Although not directly related to the PSVC, the power industry has a large interest in the reduction of harmonics because of the ever-increasing usage of consumer electronic devices. These devices are notorious for inserting large harmonic distortions into the power system.

The "hot-topic" of harmonic suppression research is the development of an adaptive harmonic filter that intelligently monitors the load and injects canceling currents, thus eliminating any harmonics that are present. Such a device working in conjunction with the PSVC could raise true power factors (PF_{TRUE}) to near unity. The adaptive harmonic filter could be designed to either work in conjunction with the PSVC or independently. Either way, the adaptive filter could be evaluated using the PSVC and a reactive load.

5.3 LESSONS LEARNED

One difficulty that needed to be overcome was the design and development of complex software for limited microcontrollers. Although the PIC is a very robust microcontroller, complex software such as the fuzzy controller is still challenging to design and implement due to RAM limitations. Also, limitations (mainly in the timers) were noticeable because the chosen microcontroller is only 8-bit. Consideration should be given to using a 16-bit PIC microcontroller for future designs. The clock speed of 20MHZ, however, is considerably fast enough for all mathematical calculations needed.

Another difficulty overcome was the move from a low power to a higher-powered application. Initially, the PSVC was implemented and tested using only lower powered components. Once the design was deemed feasible, the lower powered components were replaced with higher-powered components with slight design changes. Using the higher-powered application required developing different measurement techniques as well as different hardware implementations.

APPENDIX 1 – PSVC Source Code

```
#include<pic.h>
#include<math.h>

static bit rs  @((unsigned) &PORTC*8+0);
static bit rw  @((unsigned) &PORTC*8+1);
static bit en  @((unsigned) &PORTC*8+2);

static bit input @((unsigned) &PORTA*8+0);

float x,y;
unsigned int count,pf,i,h,hr,t,o;

void lcd_init();
void command(unsigned char);
void lcd_disp(unsigned char);
void lcd_condis(const unsigned char *,unsigned int);
void hex_dec(unsigned int);
void hex_dec_pf(unsigned int);
void delay(unsigned int);

void interrupt  timer1(void)
{
 if(TMR1IF==1)
 {
  TMR1ON=0;
  TMR1IF=0;
  TRISC=0xf0;

  count++;

  TMR1H=0xff;
  TMR1L=0x9b;
  TMR1ON=1;
 }
}

main()
{
  ADCON1=0x06;
  TRISA=0x3f;
  TRISB=0x00;
  PORTB=0xff;
  lcd_init();
  command(0x80);
  lcd_condis("  POWER FACTOR  ",16);
  while(1)
  {
   GIE=1;
```

```
   PEIE=1;
   TMR1IE=1;
   TMR1H=0xff;
   TMR1L=0x9b;
   TRISC=0xf0;
   count=0;
   while(input==0);
   TMR1ON=1;
   while(input==1);
   TMR1ON=0;
   command(0xc0);
   hex_dec(count);

   TMR1H=0xff;
   TMR1L=0x9b;

   x=count*1.8;
   x=x*3.14;
   x=x/180;
   y=cos(x);
   y=y*100;
   pf=y;
   command(0xc9);
   hex_dec_pf(pf);
   count=0;

   TRISB=0x00;

   if(pf>=90) PORTB=0xfe;
   else if(pf<90 && pf>=85) PORTB=0xfc;
   else if(pf<85 && pf>=80) PORTB=0xf8;
   else if(pf<80 && pf>=75) PORTB=0xf0;
   else if(pf<75 && pf>=70) PORTB=0xe0;
   else if(pf<70 && pf>=65) PORTB=0xc0;
  }
}

void lcd_init()
{
 TRISC=0xf0;
 TRISD=0;
 command(0x38);       //to select function set
 command(0x06);       //entry mode set
 command(0x0c);       //display on
 command(0x01);       //clear display
}

void command(unsigned char com)
{
  PORTD=com;
  en=1;
  rs=rw=0;
  delay(250);
  en=0;
  delay(250);
}
```

```
void lcd_disp(unsigned char lr)
{
 PORTD=lr;
 en=1;
 rs=1;
 rw=0;
 delay(75);
 en=0;
 delay(75);
}

void lcd_condis(const unsigned char *word,unsigned int n)
{
 unsigned int i;
 for(i=0;i<=n;i++)
 {
  lcd_disp(word[i]);
 }
}

void hex_dec(unsigned int val)
{
 h=val/100;
 hr=val%100;
 t=hr/10;
 o=hr%10;

 lcd_disp(h+0x30);
 lcd_disp(t+0x30);
 lcd_disp(o+0x30);
}

void hex_dec_pf(unsigned int val)
{
 h=val/100;
 hr=val%100;
 t=hr/10;
 o=hr%10;

 lcd_disp(h+0x30);
 lcd_disp('.');
 lcd_disp(t+0x30);
 lcd_disp(o+0x30);
}
void delay(unsigned int del)
{
 while(del--);
}
```

APPENDIX 2 – Printed Circuit Board Design

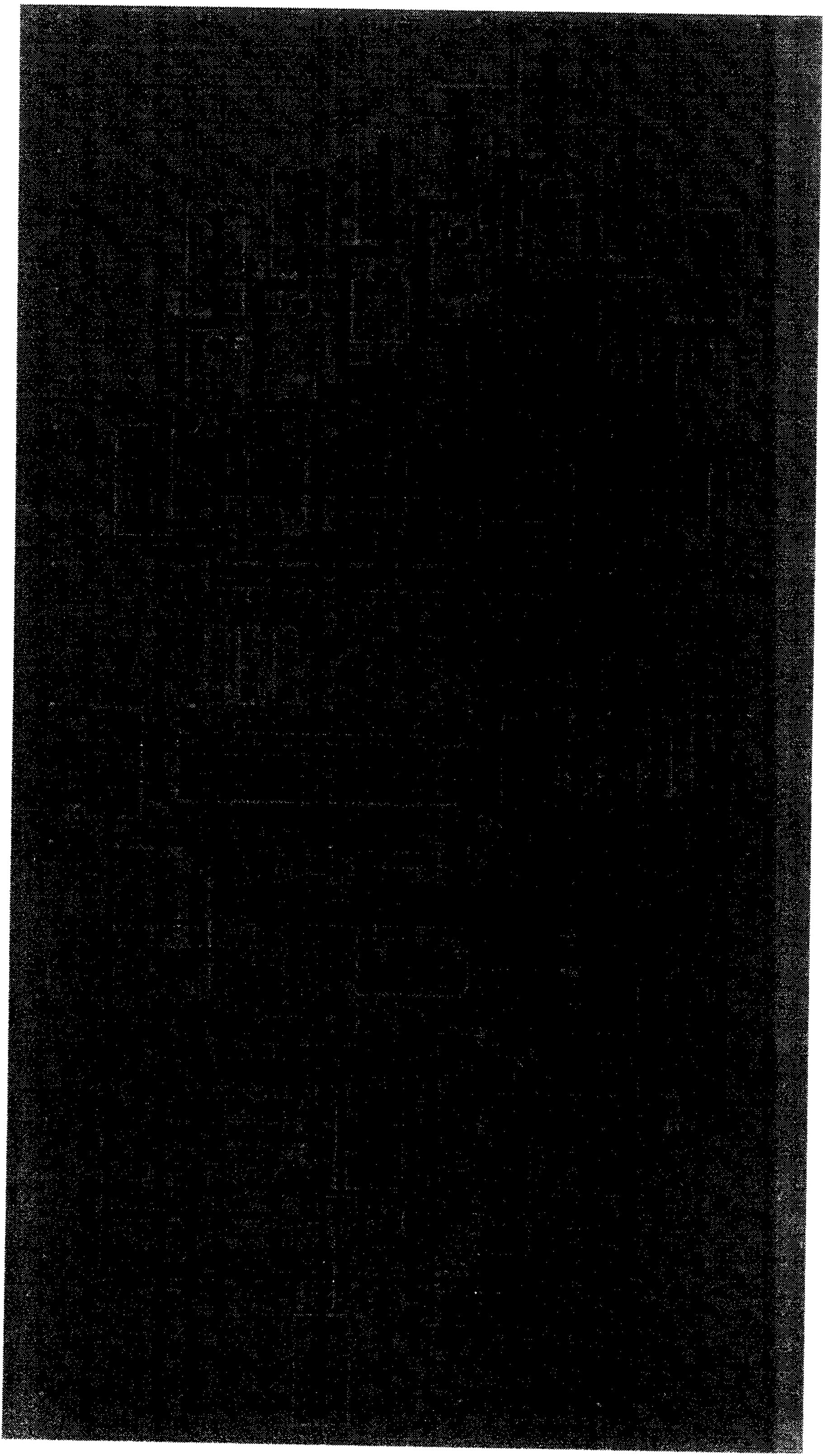

REFERENCES

[1] Hingorani, N.G, “Flexible AC Transmission”,IEEE Spectrum,April 1993, p.40-44

[2] US Department of Energy (DOE), Energy Information Administration, A Look At Residential Energy Consumption in 1997, DOE/EIA-0632 (97) pg. 9,22,15 http://www.eia.doe.gov/pub/pdf/consumption/063297.pdf

[3] “Refrigerator Monitoring, A Sequel”, Larry Kinney, Home Energy Magazine Online, September/October 2000, http://www.homeenergy.org/magazine.html, http://hem.dis.anl.gov/eehem/00/000916.html

[4] L. Gyugyi, R. Otto, T. Putnam, “Principles and Applications of Static Thyristor Controlled Shunt Compensators”, IEEE Transactions on Power Apparatus and Systems, Vol. PAS-97, No. 5, October 1978, p. 1935-1944

[5] M. El-Sharkawi, T. Williams, N. Butler, “An Adaptive Power Factor Controller for Three-Phase Induction Generators”, IEEE Transactions on Power Apparatus and Systems, Vol. PAS-104, No. 7, July 1985, p. 1825-1831

[6] M. El-Sharkawi, N. Butler, R. Yinger, “Development and Field Testing of an Adaptive Power Factor Controller”, IEEE Transactions on Energy Conversion, Vol. EC-2, No. 4, Dec. 1987

[7] S. Paul, S. Basu, R. Mondal, “A Microcomputer Controlled Static Var Compensator for Power Systems Laboratory Experiments”, IEEE Transactions on Power Systems, Vol. 7, No.1, Feb. 1992 p. 371-376

[8] A. Exposito, F. Vazquez, C. Mitchell, “Microprocessor – Based Control of an SVC for Optimal Load Compensation”, IEEE Transactions on Power Delivery, Vol. 7, No. 2, April 1992, p. 706-712

[9] R. A. KagalwalaS. S. Venkata, M. A. El-Sharkawi, “Transient analysis of distribution class adaptive VAR compensators: Simulation and Field test results”, IEEE Transactions on Power Delivery, Vol. 10, No. 2, April 1995

[10] Robert Andrew Best, Hector Zelaya-De La Parra, “Transient litesponse of a Static VAR Shunt Compensator”, IEEE TRANSACTIONS ON POWER ELECTRONICS, VOL. 11, NO. 3. MAY 1996

[11] T. Hiyama, W. Hubbi, T. Ortmeyer, "Fuzzy Logic Control Scheme with Variable Gain for Static Var Compensator to Enhance Power System Stability", IEEE Transactions on Power Systems, Vol. 14, No. 1, Feb. 1999 p. 186-191

[12] PIC16F87X 28/40 Pin 8-Bit CMOS Flash MicroControllers Data Sheet, Online Datasheet provided by Microchip Corp. http://www.microchip.com/download/pline/picmicro/families/16f87x/30292c.pdf

[13] Microchip Corp. Application Note 40171a: PICREF-4, PICDIM Lamp Dimmer for the PIC12C508: 1997 pg. 3-4 http://www.microchip.com/download/appnote/rdesigns/40171a.pdf

[14] PIC Compiler: PICC, Developed by CCSInfo, PICC Users Manual, http://www.ccsinfo.com/piccmanual3.zip http://www.ccsinfo.com/

[15] MPLAB PIC Programmer and Debugger IDE v. 5.6, Microchip Corp., http://www.microchip.com/1010/pline/tools/picmicro/devenv/mplabi/

[16] PZ4000 Power Analyzer, Manufactured by Yokogawa, http://www.yokogawa.com/tm/Bu/PZ4000/

[17] IEEE Standard 519-1992: Recommended Practice and Requirements for Harmonic Control in Electric Power Systems, 1992

[18] "Power Factor and Harmonics", Online Robicon Technical Document, http://www.robicon.com/library/acrobat/pfactor.pdf

[19] Arkansas Public Service Commission, Entergy-Arkansas, Standby Service Rider (SS) – Part III. Rate Schedule Number: 20, 03/09/2001, p. 4, http://www.entergy-arkansas.com/tariffs/20ss.pdf

[20] DIXIE ESCALANTE RURAL ELECTRIC ASSOCIATION, BERYL, UTAH 84714 Effective Rates: April 1998 http://www.cc.state.az.us/utility/tariff/dixie.pdf

[21] Nicholas Abi-Samra, "Benefits of Power Factor Correction Capacitors", Fellow Engineer, Westinghouse Electric Corporation http://www.geocities.com/SiliconValley/Pines/3406/paper1.htm

TECHNICAL PUBLICATION

V.Ramkumar, D.Somasundareswari, "Design of a Personal Static VAR Compensator", Conference Proceedings of Cutting Edge Technologies in Power Conversion And Industrial Drives" (PCID'05), Bannari Amman Institute of Technology, Sathyamangalam, Mar. 2005 p. 517-521